Corner Bracket Zn 40 Set 90°

Application:
For right-angled fixing of profiles without the need of machining the profiles.

Supply:
Set of Corner Bracket with Plastic Cap. M8 T-nuts, Washers D8 and K6S ISO7380 M8x16 screws included.

Material: GDZn (zinc diecasting), aluminium color
System: 40 - Slot 8
Type: Angles Brackets and Corners; Fasteners



Every care has been taken to ensure the accuracy of the information in this document, but we take no liability for any errors or omissions. We reserve the right to make changes without prior notice.





Every care has been taken to ensure the accuracy of the information in this document, but we take no liability for any errors or omissions. We reserve the right to make changes without prior notice.

General Data

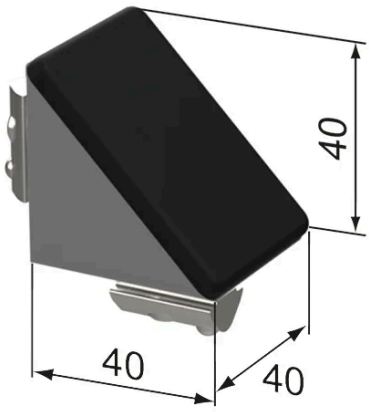

RA1100

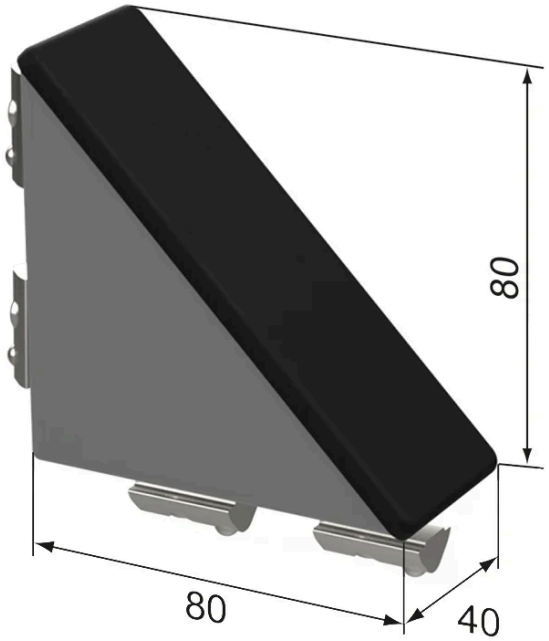

RA1115

Designation	Description	System	Weight (g)	Remark
RA1100	Set Corner Bracket 40 x 40, complete	40 - Slot 8	141	Complete set
RA1115	Set Corner Bracket 40 x 80, complete	40 - Slot 8	388	Complete set

Every care has been taken to ensure the accuracy of the information in this document, but we take no liability for any errors or omissions. We reserve the right to make changes without prior notice.