Fixing Blocks

Application:
To mount panels to profiles with a t-slot width of 8mm. An M6 screw is required for installation.

RA1140 Fixing block 40 Vario is a complete set. It includes four different sized, removable caps to accommodate panels with 2 - 8 mm thickness.

Material: PA, black
System: 40 - Slot 8
Type: Fixing Blocks/Fastening Elements



Every care has been taken to ensure the accuracy of the information in this document, but we take no liability for any errors or omissions. We reserve the right to make changes without prior notice.

General Data

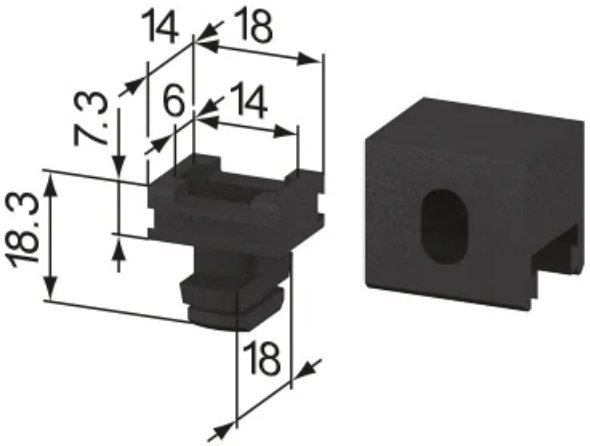

Insert for RA1140

Designation	Description	System	Weight (g)	Compatible with
RA1140	Fixing Block 40 vario	40 - Slot 8	27	2-8 mm panels

Every care has been taken to ensure the accuracy of the information in this document, but we take no liability for any errors or omissions. We reserve the right to make changes without prior notice.