Angle Plate, steel

Universally applicable attachment bracket. Links two aluminium profiles at a right angle.

Mounting material:
M8 × 16 countersunk screw (DIN7991), M8 slot 8 slot nut

Material: Steel, black
System: 40 - Slot 8
Type: Angles Brackets and Corners; Fasteners



Every care has been taken to ensure the accuracy of the information in this document, but we take no liability for any errors or omissions. We reserve the right to make changes without prior notice.



General Data

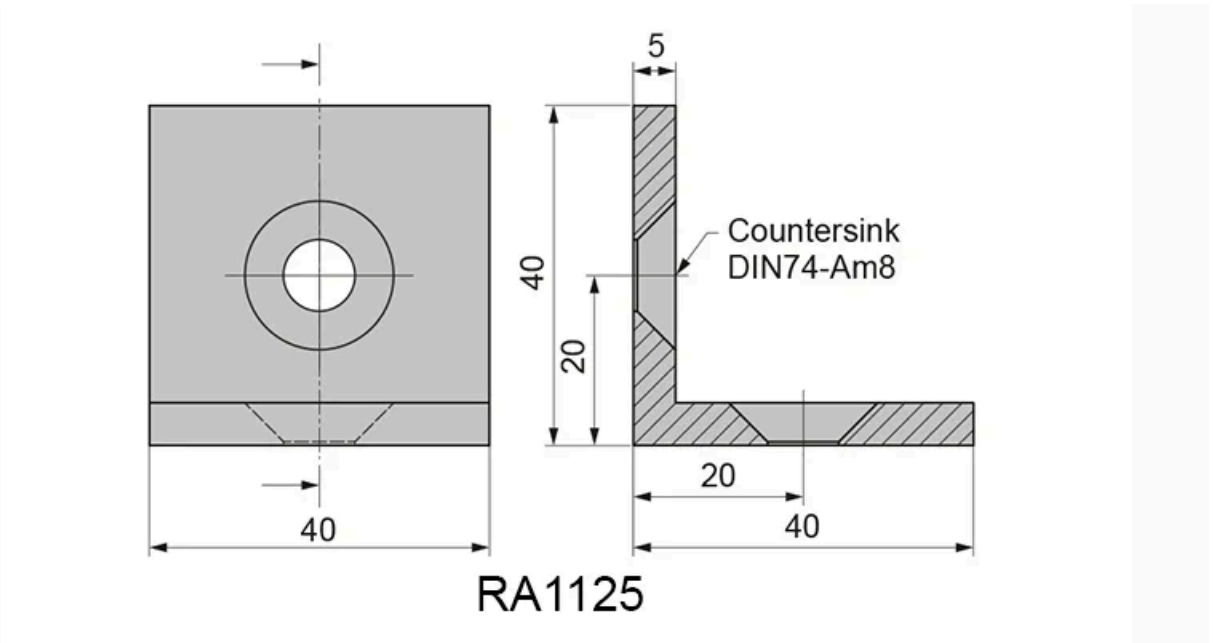

Designation	Description	System	Fmax (N)	Mmax (Nm)
RA1125	Bracket 40 × 40	40 - Slot 8	1500	50

Every care has been taken to ensure the accuracy of the information in this document, but we take no liability for any errors or omissions. We reserve the right to make changes without prior notice.