Central Fastener G 30 SS / G 45 SS

Application:
The anchor is screwed into the t-nut at either 30° or 45°.
Special angles are available on request.

Assembly:
Bore hole for the barrel housing: Ø 12 mm, 27 mm (35 mm) from profile end, 30 mm deep.
Bore for center hole on end of profile for anchor: Ø 8.5 mm, 25 mm deep.



Material: Steel, zinc-plated
System: 40 - Slot 8
Type: Fasteners

Every care has been taken to ensure the accuracy of the information in this document, but we take no liability for any errors or omissions. We reserve the right to make changes without prior notice.

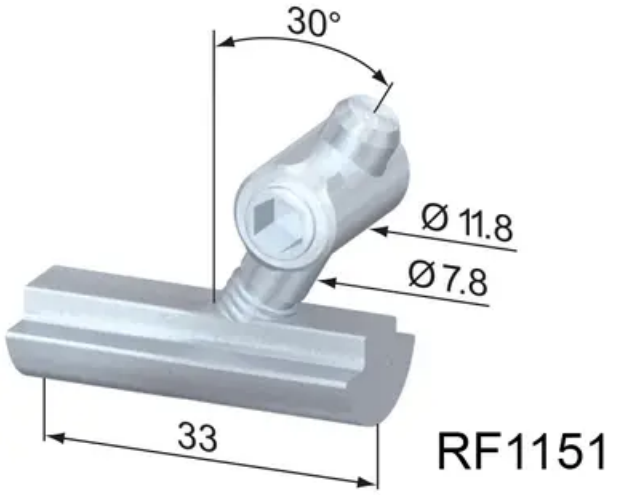

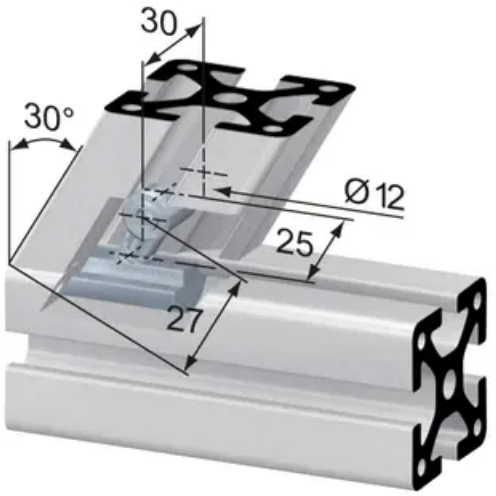

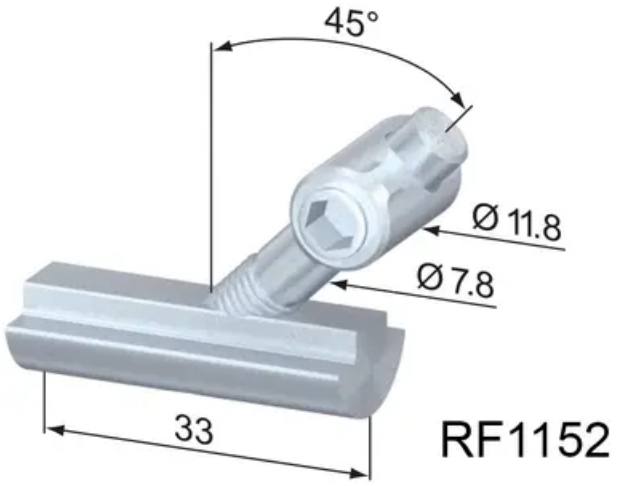

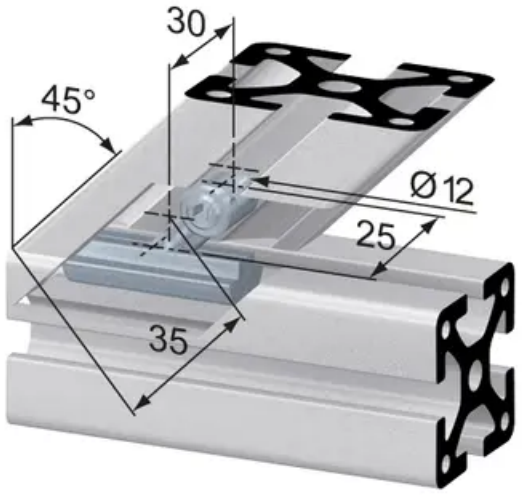

General Data

Designation	Description	System	Weight (g)
RF1151	Central Fastener G 30 SS	40 - Slot 8	56
RF1152	Central Fastener G 45 SS	40 - Slot 8	57

Every care has been taken to ensure the accuracy of the information in this document, but we take no liability for any errors or omissions. We reserve the right to make changes without prior notice.