Central Fastener 40 G

Application:
Butt fastener. Used for joining two profiles end to end or for frontal attaching of plates. The anchor is screwed into the opposing profile or plate.



Assembly:
Bore hole for the barrel housing: Ø 12 mm, 15 mm from profile end, 30 mm deep.
Bore for center hole on end of profile for anchor: Ø 8.5 mm, 25 mm deep.

Material: Steel, zinc-plated
System: 40 - Slot 8
Type: Fasteners

Every care has been taken to ensure the accuracy of the information in this document, but we take no liability for any errors or omissions. We reserve the right to make changes without prior notice.

General Data

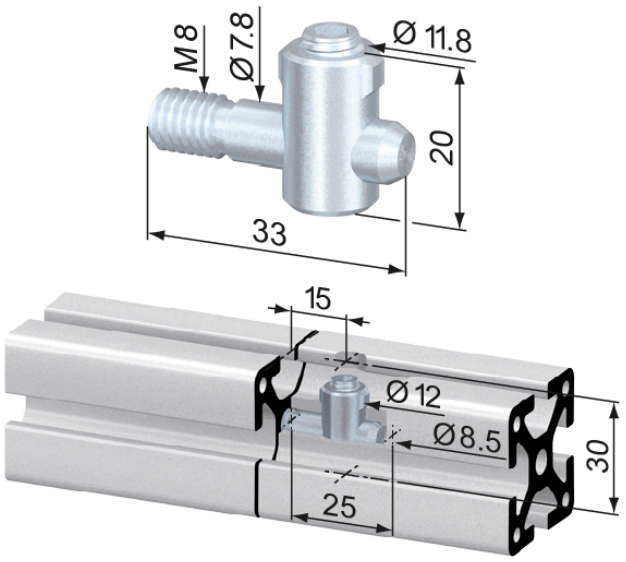

Designation	System	Weight (g)
RF1156	40 - Slot 8	22

Every care has been taken to ensure the accuracy of the information in this document, but we take no liability for any errors or omissions. We reserve the right to make changes without prior notice.