Central Fastener 40 EL / EQ

Application:
All-purpose universal fastener. The twist-in anchor, with an anti-twist feature, can be fixed in the profile groove at any point. The anchor is held in position by a spring-loaded ball in the opposing profile t-slot.



Assembly:
Bore hole for the barrel housing: Ø 12 mm, 15 mm from profile end, 30 mm deep.
Bore for center hole on end of profile for anchor: Ø 8.5 mm, 25 mm deep.

System: 40 - Slot 8
Type: Fasteners

Every care has been taken to ensure the accuracy of the information in this document, but we take no liability for any errors or omissions. We reserve the right to make changes without prior notice.

General Data

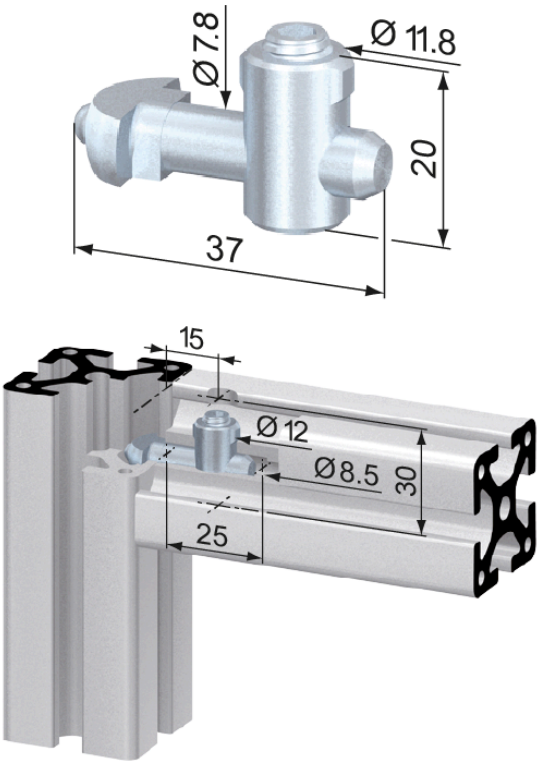

Designation	Description	System	Material	Weight (g)
SV1021V	Central Fastener 40 EQ	40 - Slot 8	Steel, zinc-plated	26

Every care has been taken to ensure the accuracy of the information in this document, but we take no liability for any errors or omissions. We reserve the right to make changes without prior notice.