Central Fastener 40 S / SV

Application:
All-purpose universal fastener. The slide-in anchor is held in position in the profile slot by a spring-loaded ball in the opposing profile t-slot.

The SV fasteners have an anti-twist feature.



Assembly:
Bore hole for the barrel housing: Ø 12 mm, 15 mm from profile end, 30 mm deep. Bore for center hole on end of profile for anchor: Ø 8.5 mm, 25 mm deep.

System: 40 - Slot 8
Type: Fasteners

Every care has been taken to ensure the accuracy of the information in this document, but we take no liability for any errors or omissions. We reserve the right to make changes without prior notice.





General Data

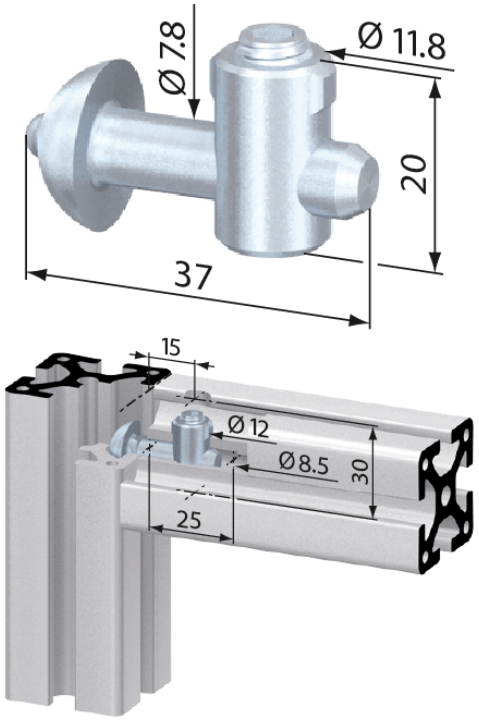

Designation	Description	System	Material	Weight (g)
RF1158	Central fastener 40 SV	40 - Slot 8	Steel, zinc-plated	29

Every care has been taken to ensure the accuracy of the information in this document, but we take no liability for any errors or omissions. We reserve the right to make changes without prior notice.