Profile Cap ø7 for Standard Fastener

Application:
Use the profile cap to close the drill hole in closed profiles.

Material: PVC
System: 40 - Slot 8
Type: Fasteners



Every care has been taken to ensure the accuracy of the information in this document, but we take no liability for any errors or omissions. We reserve the right to make changes without prior notice.

General Data

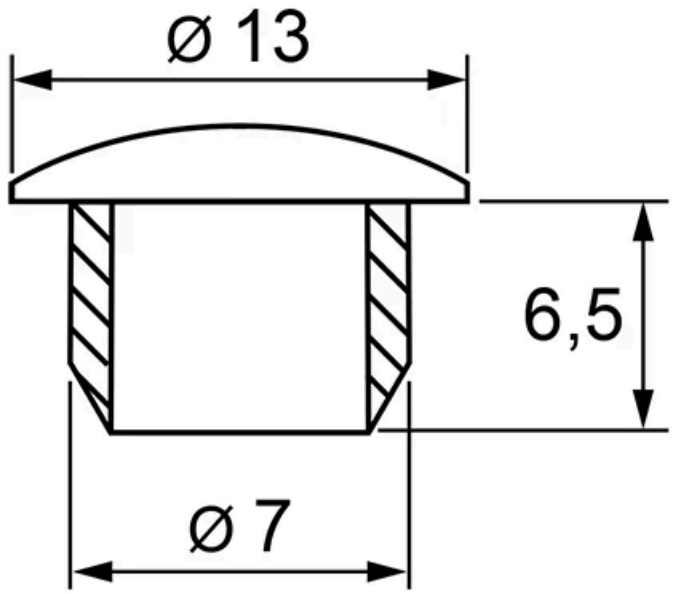

Designation	Description	System
RT1110	Cap 8 D7, black	40 - Slot 8
RT1115	Cap 8 D7, grey	40 - Slot 8

Every care has been taken to ensure the accuracy of the information in this document, but we take no liability for any errors or omissions. We reserve the right to make changes without prior notice.