# T-Nuts, push-in

Application:
T-nut for swiveling into the t-slot. Fits into the t-slot at any point. Held in position by a grub screw. Raised area fits into the t-slot to stop twisting.

**Material:** Steel, zinc-plated
**System:** 40 - Slot 8
**Type:** T-nuts




Every care has been taken to ensure the accuracy of the information in this document, but we take no liability for any errors or omissions. We reserve the right to make changes without prior notice.

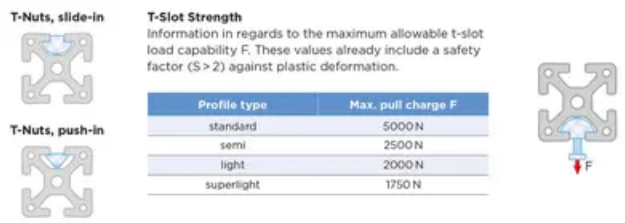


## General Data

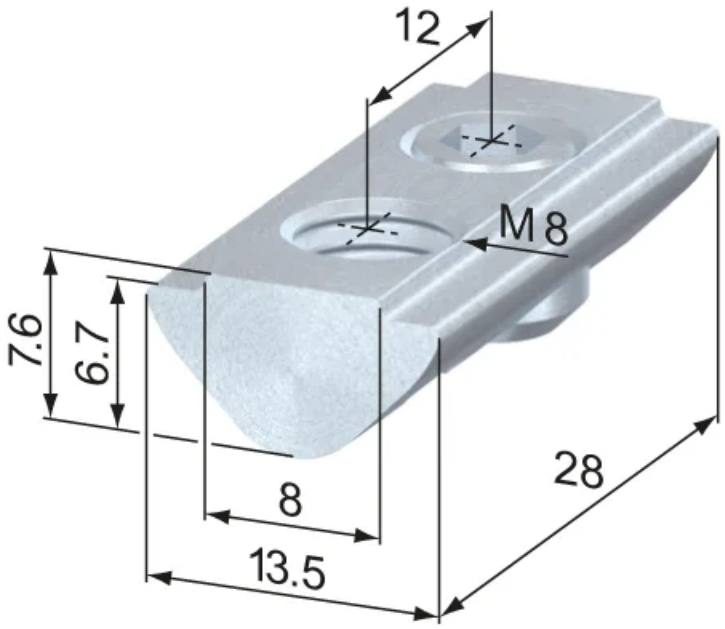


| Designation | System | Thread | Weight (g) |
|---|---|---|---|
| **RN1160** | 40 - Slot 8 | M5 | 14 |
| **RN1161** | 40 - Slot 8 | M6 | 14 |
| **RN1162** | 40 - Slot 8 | M8 | 12 |


Every care has been taken to ensure the accuracy of the information in this document, but we take no liability for any errors or omissions. We reserve the right to make changes without prior notice.