Motors for BF80

This is a selection of standard motors available for our BF80 series.

We can customise the drive shaft to accommodate many different motors and gear choices. Please contact Rollco for more information.

Dimensions in mm.

NOTE!
Other motors and frequency converters are available on request. Individual motors are not tested. Motors and gears are not assembled to the unit.



Every care has been taken to ensure the accuracy of the information in this document, but we take no liability for any errors or omissions. We reserve the right to make changes without prior notice.

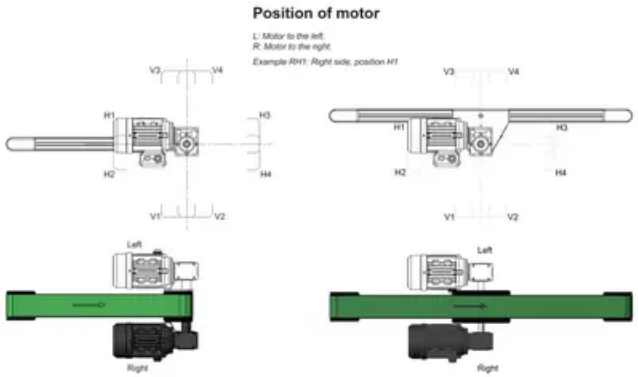

General Data

T2A71/SB050 (BF80)

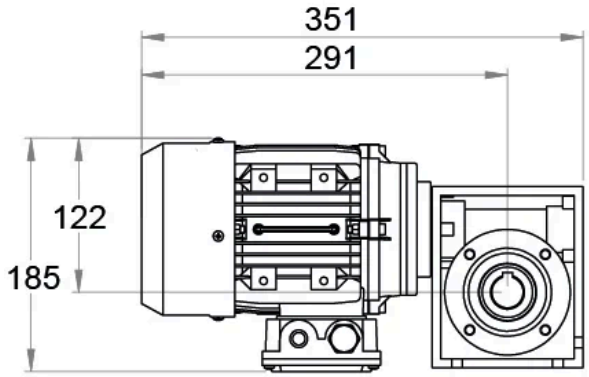

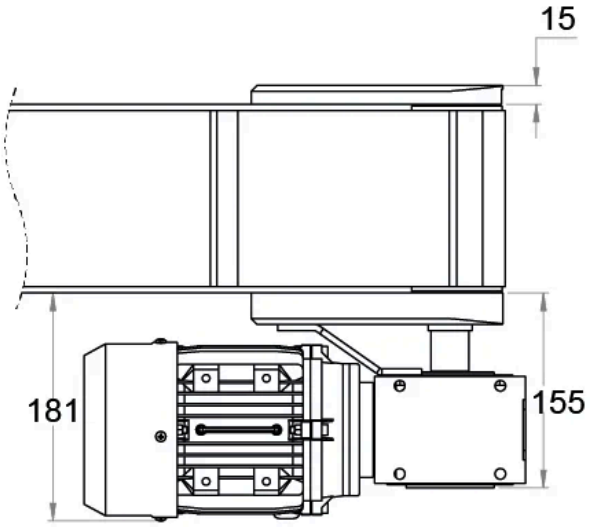

Designation	Voltage (V)	Power (kW)	Speed (rpm)	Protection Class
T2A71A-4	230/400	0.25	1400	IP55
T2A71B-4	230/400	0.37	1400	IP55
T2A71C-4	230/400	0.55	1395	IP55

Every care has been taken to ensure the accuracy of the information in this document, but we take no liability for any errors or omissions. We reserve the right to make changes without prior notice.