BF40MOK

Belt conveyor with mid drive and knife edge out-feed. The product has a wide range of standard belts.



General load capacity for the BF40-family reaches up to 75 kg. Some combinations may give significantly less capacity, normally limited either by the available power or the belt traction capacity.

Dimension in mm.

For dimensions outside our standard range, please contact Rollco.

Use our CAD configurator to design your Belt conveyor according to your preferences and get a visual view, download data sheet and CAD files.

Declaration of incorporation of partly completed machinery according to Directive 2006/42/EC Annex II 1B.

Length (mm): Up to 4000
Gear ratio (I): 5 / 7.5 / 10 / 15 / 20 / 25 / 30 / 40 / 50
Speed (m/min): 37 (37.3) / 25 (24.9) / 19 (18.7) / 12 (12.4) / 9 (9.4) / 8 (7.5) / 6 (6.2) / 5 (4.7) / 4 (3.7)
Drive side: Right/left
Motor Position: Horizontal/vertical — 1-4

Every care has been taken to ensure the accuracy of the information in this document, but we take no liability for any errors or omissions. We reserve the right to make changes without prior notice.

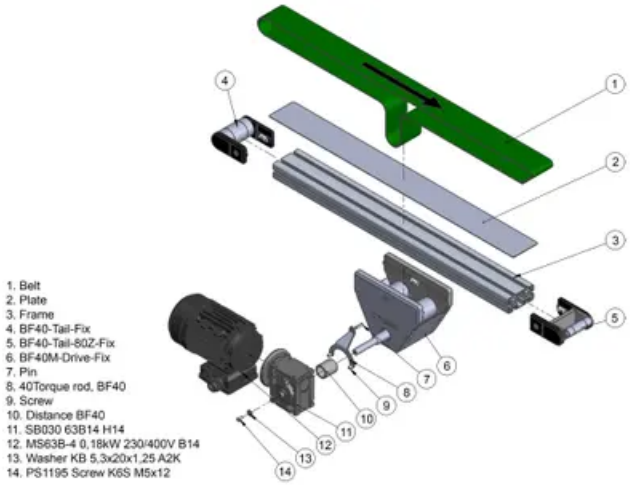

BF40M Drive holder

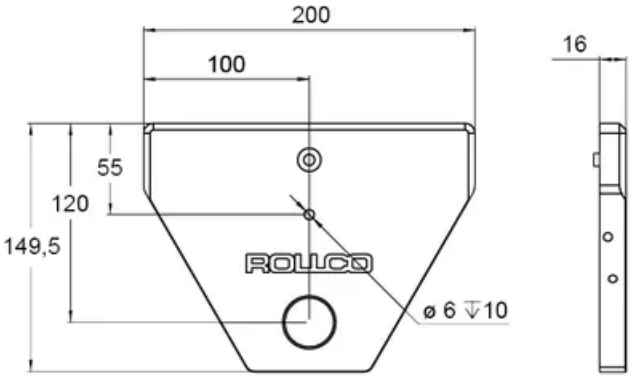

Gear ratio (I)	Speed (m/min)
5	37 (37,3)
7,5	25 (24,9)
10	19 (18,7)
15	12 (12,4)
20	9 (9,4)
25	8 (7,5)
30	6 (6,2)
40	5 (4,7)
50	4 (3,7)

Every care has been taken to ensure the accuracy of the information in this document, but we take no liability for any errors or omissions. We reserve the right to make changes without prior notice.

General Data

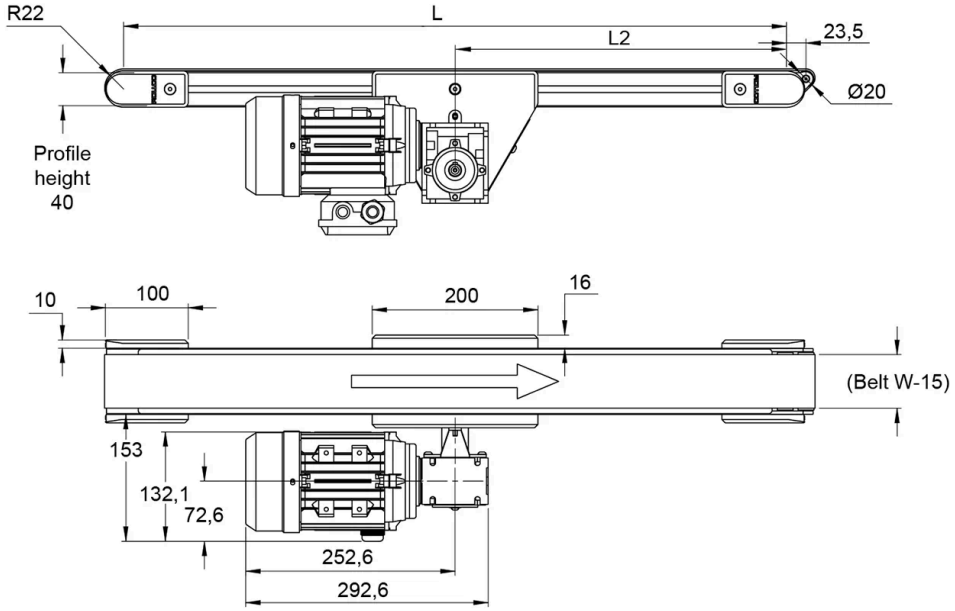

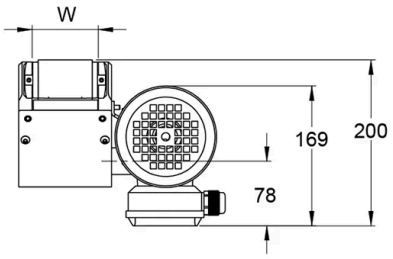

W = Frame width
L = c/c rollers

Designation	Width (mm)
BF40MOK - 40	40
BF40MOK - 80	80
BF40MOK - 120	120
BF40MOK - 160	160
BF40MOK - 200	200
BF40MOK - 250	250
BF40MOK - 300	300
BF40MOK - 350	350
BF40MOK - 400	400

Every care has been taken to ensure the accuracy of the information in this document, but we take no liability for any errors or omissions. We reserve the right to make changes without prior notice.