Adapter kit RHL

Easily connect your RHL Linear unit with a planetary gear by using our adapter-kit. Design your complete solution of RHL Linear unit + Adapter kit + Planetary gear with our CAD-Configurator.



Every care has been taken to ensure the accuracy of the information in this document, but we take no liability for any errors or omissions. We reserve the right to make changes without prior notice.



General Data

RHL80

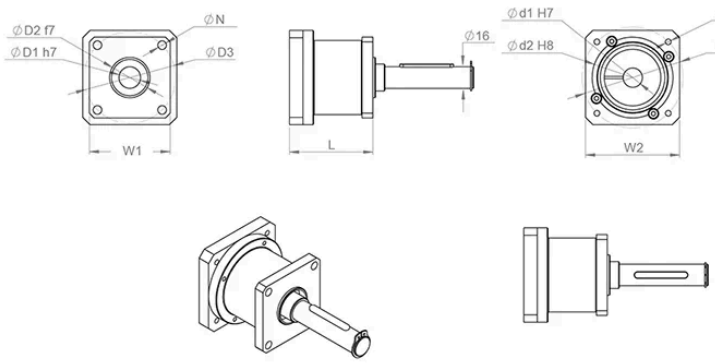

RHL110

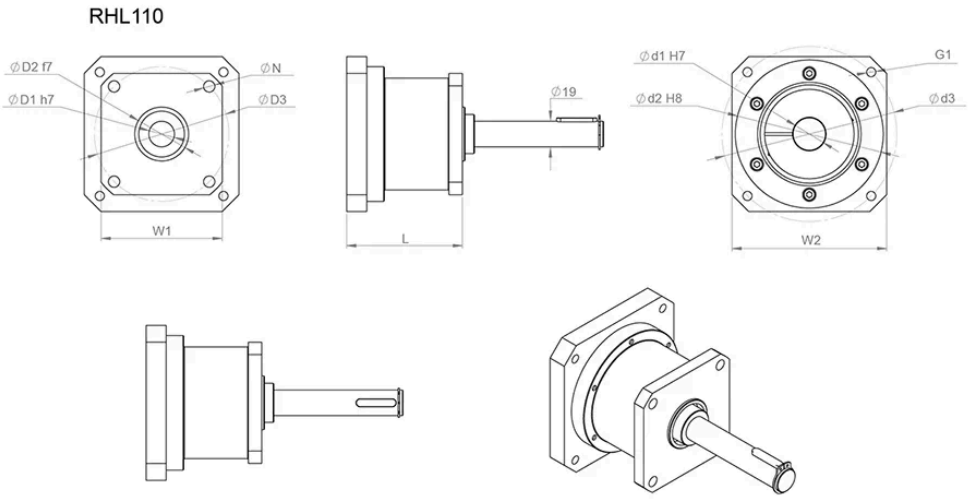

Every care has been taken to ensure the accuracy of the information in this document, but we take no liability for any errors or omissions. We reserve the right to make changes without prior notice.

Designation	Compatible with	D1	D2	D3	G1
RHL80-H16-CPS015 Adapter kit	RHL80	14	60	75	M5
RHL110-H19-CPS035 Adapter kit	RHL110	24	110	130	M8

Designation	N1	L	W1	W2
RHL80-H16-CPS015 Adapter kit	6.4	62	60x60	70x70
RHL110-H19-CPS035 Adapter kit	8.4	86	90x90	115x115

Every care has been taken to ensure the accuracy of the information in this document, but we take no liability for any errors or omissions. We reserve the right to make changes without prior notice.