WBK..DF/WBK..DFF

Support unit heavy load for end of ball screw.

All dimensions in mm.

Using standard shaft nut type RN...W.

* The Maximal tightening torque of the nut should not be exceeded. It is not required, neither recommended to tighten the nut to its limits. What is mandatory is to always tighten the set screws to prescribed values, after the nut have been tighten to a distinct stop.



Every care has been taken to ensure the accuracy of the information in this document, but we take no liability for any errors or omissions. We reserve the right to make changes without prior notice.



General Data

Heavy load units can operate at very high loads compared to its size. Dynamic loads up to 100% of Ca is feasible but at the expense of the life.

Designation	Compatible with	Fig.	Bearing	Dynamic Permissible Axial Load (N)	Static Permissible Axial Load (N)
WBK25DF	Screw dim. 3205 / 3210 / 3220 / 3232	1	25TAC 62B	20000	28500
WBK30DF	Screw dim. 4005 / 4010 / 4020 / 4040	1	30TAC 62B	20500	30200
WBK30DFF	Screw dim. 4005 / 4010 / 4020 / 4040	1	30TAC 62B	33300	60400
WBK40DF	Screw dim. 5010 / 5050	2	40TAC 72B	22300	36400
WBK40DFF	Screw dim. 5010 / 5050	2	40TAC 72B	36100	72800

Designation	Max. Tightening Torque Nut (Nm)*	Tightening Torque Set Screws (Nm)	Axial Dynamic Load Capacity Ca (N)	Axial Static Load Capacity C0a (N)
WBK25DF	87	5.0	28500	40700
WBK30DF	105	5.0	29200	43200
WBK30DFF	105	5.0	47600	86300
WBK40DF	160	5.0	31900	52000
WBK40DFF	160	5.0	51500	104000

Every care has been taken to ensure the accuracy of the information in this document, but we take no liability for any errors or omissions. We reserve the right to make changes without prior notice.

Dimensions

WBK25DF / WBK30DF / WBK30DFF

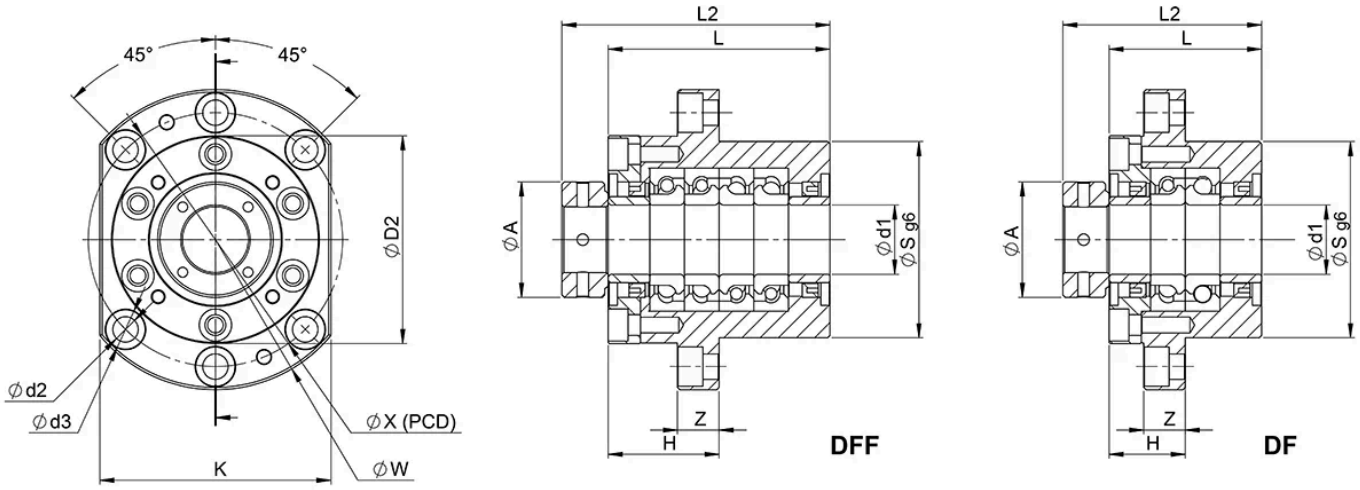

WBK40DF / WBK40DFF

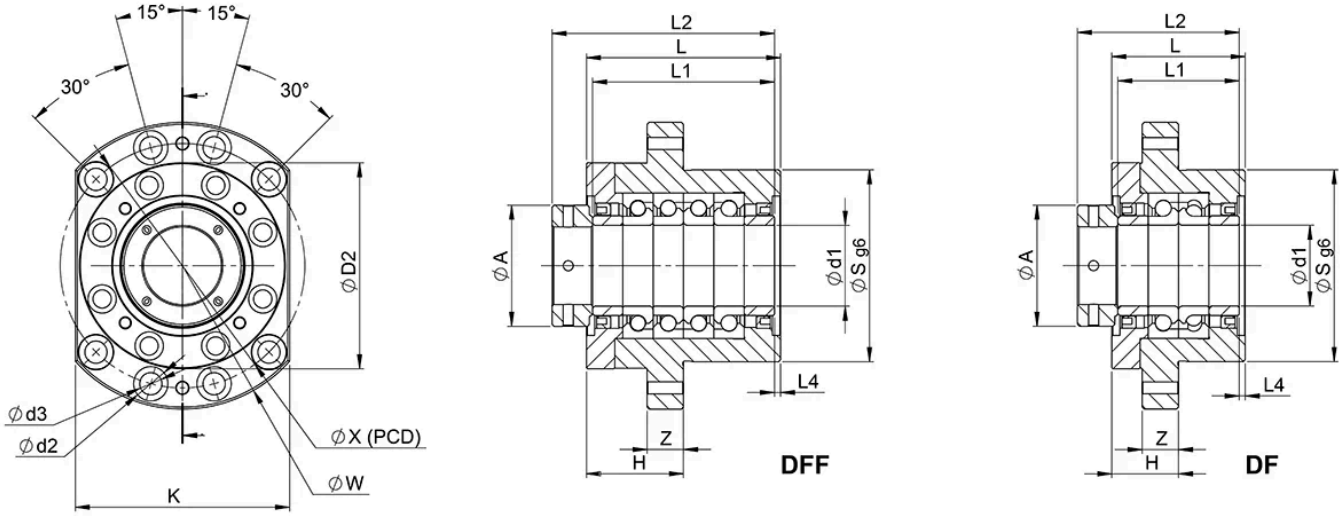

Designation	A	H	K	L	S	Z	d1	d2	D3
WBK25DF	45	33	100	66	85	18	25	11	17
WBK30DF	50	33	100	66	85	18	30	11	17
WBK30DFF	50	48	100	96	85	18	30	11	17
WBK40DF	60	33	106	66	95	18	40	11	17
WBK40DFF	60	48	106	96	95	18	40	11	17

Designation	L1	L2	L4	X	W
WBK25DF	66	86	-	110	130
WBK30DF	66	86	-	110	130
WBK30DFF	96	116	-	110	130
WBK40DF	60	83	3	121	142
WBK40DFF	90	118	3	121	142

Every care has been taken to ensure the accuracy of the information in this document, but we take no liability for any errors or omissions. We reserve the right to make changes without prior notice.

Every care has been taken to ensure the accuracy of the information in this document, but we take no liability for any errors or omissions. We reserve the right to make changes without prior notice.