FFN

Support unit for end of ball screw.

All dimensions in mm.

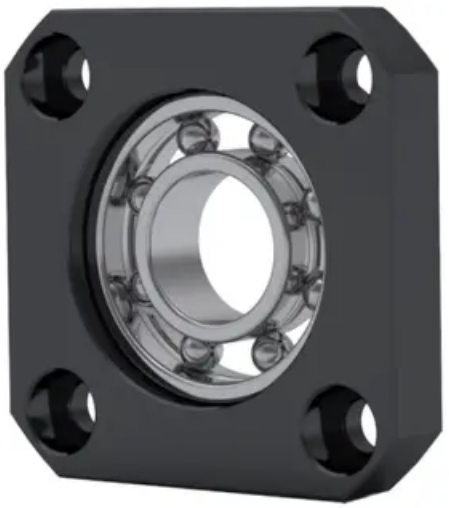

Every care has been taken to ensure the accuracy of the information in this document, but we take no liability for any errors or omissions. We reserve the right to make changes without prior notice.

General Data

Designation	Compatible with	Bearing
FFN10	Screw dim. 1402	608-2Z
FFN12	Screw dim. 1605 / 1610 / 1616 / 1632	6000-2Z
FFN15	Screw dim. 2005 / 2020 / 2040	6002-2Z
FFN17	Screw dim. 2510	6203-2Z
FFN20	Screw dim. 2505 / 2525 / 2550	6204-2Z
FFN25	Screw dim. 3205 / 3210 / 3220 / 3232	6205-2Z
FFN30	Screw dim. 4005 / 4010 / 4020 / 4040	6206-2Z

Dimensions

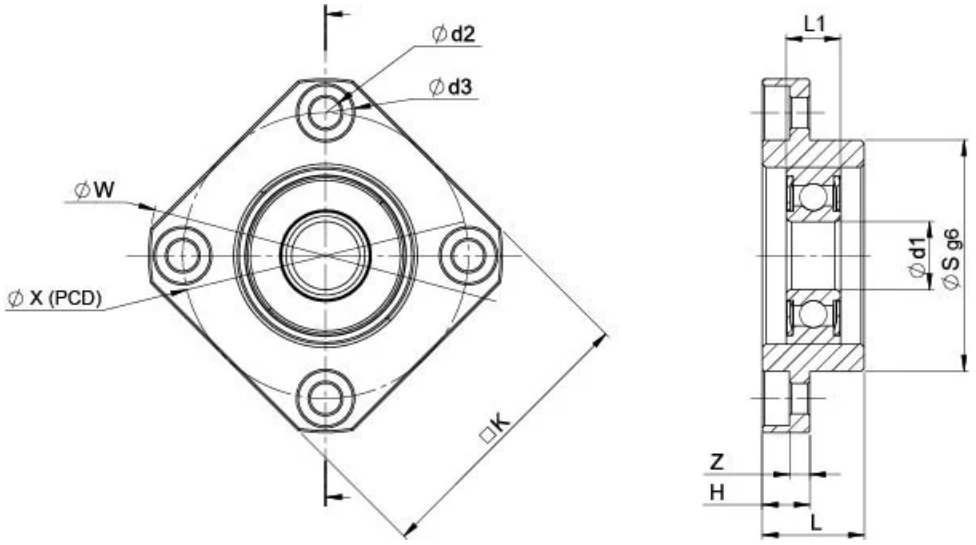

Designation	H	K	L	S	Z	d1	d2	D3	L1
FFN10	7	35	12	28	3	8	3.4	6.5	7
FFN12	7	42	15	34	3	10	4.5	8	8
FFN15	9	52	17	40	3.5	15	5.5	9.5	9
FFN17	11	61	20	50	4.5	17	6.6	11	12
FFN20	11	68	20	57	4.5	20	6.6	11	14
FFN25	14	79	24	63	5.5	25	9	14	15
FFN30	18	93	27	75	7	30	11	17	16

Designation	X	W
FFN10	35	43
FFN12	42	52
FFN15	50	63
FFN17	62	77
FFN20	70	85
FFN25	80	98
FFN30	95	117

Every care has been taken to ensure the accuracy of the information in this document, but we take no liability for any errors or omissions. We reserve the right to make changes without prior notice.