FKN

Support unit for end of ball screw.

All dimensions in mm.

Using standard shaft nut type RN.

* The Maximal tightening torque of the nut should not be exceeded. It is not required, neither recommended to tighten the nut to its limits. What is mandatory is to always tighten the set screws to prescribed values, after the nut have been tighten to a distinct stop.



Every care has been taken to ensure the accuracy of the information in this document, but we take no liability for any errors or omissions. We reserve the right to make changes without prior notice.

General Data

* Dynamic limits are the loads where a reliable life time calculation isn't possible to do. Noise level and heat generation will also increase rapidly above this limit. Static limit is calculated with a static saftey factor s0 = 2,5 to C0a. See more in section "Life Calculation" or contact Rollco for advise.

*Axial dynamic rating Ca is used to calculate the nominal life of the bearings. Axial static rating C0a is a theoretical value where the bearings get permanent damaged. See more in section "Life Calculation" or contact Rollco for advise.

Designation	Compatible with	Bearing	Dynamic Permissible Axial Load (N)	Static Permissible Axial Load (N)	Max. Tightening Torque Nut (Nm)*
FKN06	Screw dim. 0801 / 082,5 / 1002	706 A	720	960	2
FKN08	Screw dim. 1202 / 1204	708 A	1020	1760	3
FKN10	Screw dim. 1402	7000 A	2000	3150	3
FKN12	Screw dim. 1605 / 1610 / 1616 / 1632	7001 A	2400	3600	7
FKN15	Screw dim. 2005 / 2020 / 2040	7002 A	2900	4200	8
FKN17	Screw dim. 2510	7203 A	4100	7300	10
FKN20	Screw dim. 2505 / 2525 / 2550	7204 B	8300	11800	17
FKN25	Screw dim. 3205 / 3210 / 3220 / 3232	7205 B	9700	14500	21
FKN30	Screw dim. 4005 / 4010 / 4020 / 4040	7208 B	14200	20800	32

Designation	Tightening Torque Set Screws (Nm)	Axial Dynamic Load Capacity Ca (N)	Axial Static Load Capacity C0a (N)
FKN06	0.6	2670	2410
FKN08	0.6	4410	4390
FKN10	0.6	7040	7880
FKN12	1.5	7600	9000
FKN15	1.5	8000	10500
FKN17	1.5	14200	18200
FKN20	1.5	23300	29400
FKN25	5.0	26000	36200
FKN30	5.0	36000	51900

Every care has been taken to ensure the accuracy of the information in this document, but we take no liability for any errors or omissions. We reserve the right to make changes without prior notice.

Dimensions

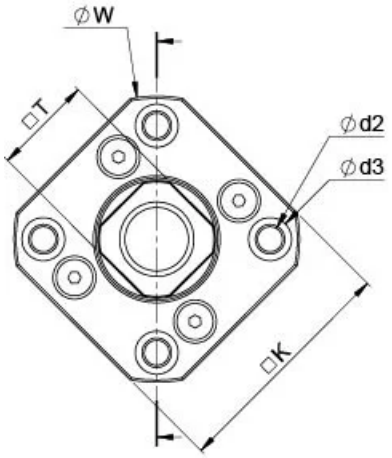

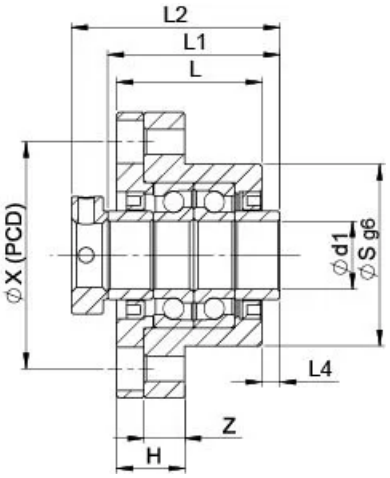

Designation	H	K	L	S	T	Z	d1	d2	D3
FKN06	7	34	20	22	12	3	6	3.4	6.5
FKN08	9	35	23	28	14	5	8	3.4	6.5
FKN10	10	42	27	34	16	6	10	4.5	8
FKN12	10	44	27	36	19	6	12	4.5	8
FKN15	15	52	32	40	22	9	15	5.5	9.5
FKN17	22	61	45	50	24	12	17	6.6	11
FKN20	22	68	52	57	30	12	20	6.6	11
FKN25	27	79	57	63	35	14	25	9	14
FKN30	30	93	62	75	40	15	30	11	17.5

Designation	L1	L2	L4	X	W
FKN06	22	27	1.5	28	36
FKN08	25	31.5	1.5	35	43
FKN10	27	35	0.5	42	52
FKN12	27	35	0.5	44	54
FKN15	38	46	4	50	63
FKN17	44	56	1	62	77
FKN20	50	61	1	70	85
FKN25	58	73	4	80	98
FKN30	50	70	-3	95	117

Every care has been taken to ensure the accuracy of the information in this document, but we take no liability for any errors or omissions. We reserve the right to make changes without prior notice.