BFN

Support Unit for end of ball screw.

All dimensions in mm.



Every care has been taken to ensure the accuracy of the information in this document, but we take no liability for any errors or omissions. We reserve the right to make changes without prior notice.

General Data

Designation	Compatible with	Bearing
BFN08	Screw dim. 1202 / 1204	606-2Z
BFN10	Screw dim. 1402	608-2Z
BFN12	Screw dim. 1605 / 1610 / 1616 / 1632	6000-2Z
BFN15	Screw dim. 2005 / 2020 / 2040	6002-2Z
BFN17	Screw dim. 2510	6203-2Z
BFN20	Screw dim. 2505 / 2525 / 2550	6004-2Z
BFN25	Screw dim. 3205 / 3210 / 3220 / 3232	6205-2Z
BFN30	Screw dim. 4005 / 4010 / 4020 / 4040	6206-2Z
BFN40	Screw dim. 5010 / 5050	6208-2Z

Dimensions

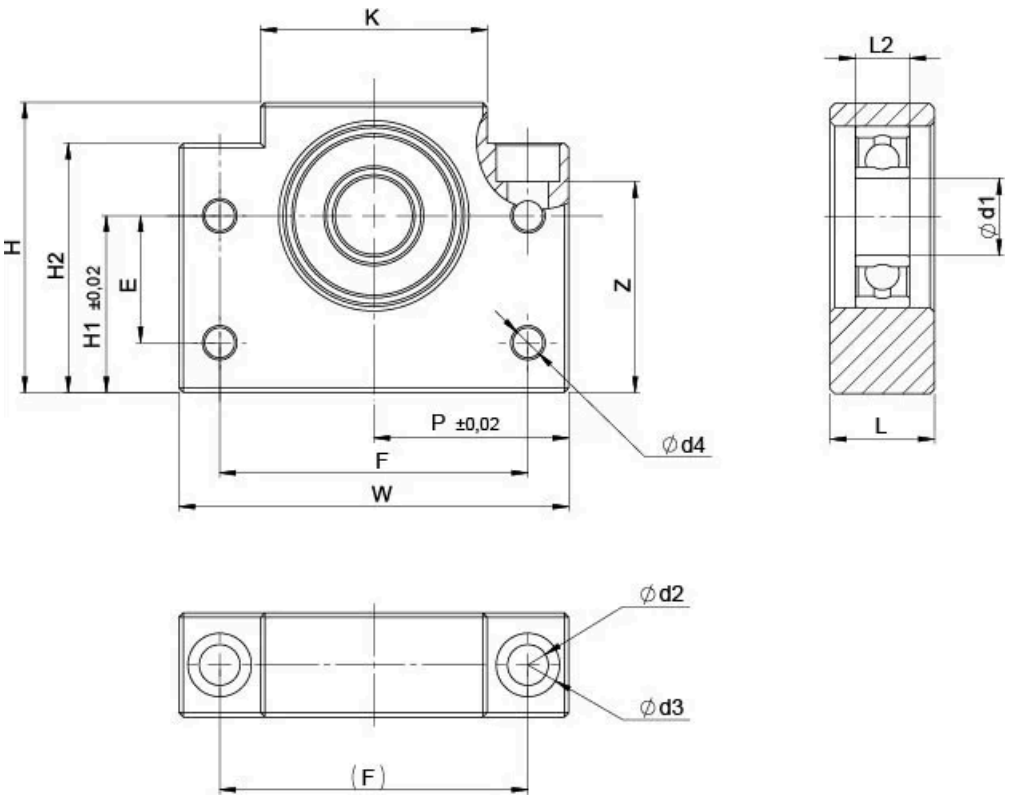

Designation	E	F	H	K	L	P	Z	d1	d2
BFN08	-	38	32	25	14	26	14	6	6.6
BFN10	15	46	39	34	20	30	27.5	8	6.6
BFN12	18	46	43	34	20	30	31	10	6.6
BFN15	18	54	48	40	20	35	31.5	15	6.6
BFN17	28	68	64	50	23	43	46.5	17	9
BFN20	22	70	60	52	26	44	41.5	20	9
BFN25	33	85	80	64	30	53	59	25	11
BFN30	33	102	89	76	32	64	65	30	14
BFN40	37	130	110	100	37	80	72.5	40	18

Every care has been taken to ensure the accuracy of the information in this document, but we take no liability for any errors or omissions. We reserve the right to make changes without prior notice.

Designation	D3	D4	H1	H2	L2	W
BFN08	11	-	17	26	6	52
BFN10	10.8	5.5	22	32.5	7	60
BFN12	10.8	5.5	25	32.5	8	60
BFN15	11	5.5	28	38	9	70
BFN17	14	6.6	39	55	12	86
BFN20	14	6.6	34	50	12	88
BFN25	17	9	48	70	15	106
BFN30	20	11	51	78	16	128
BFN40	26	14	60	90	18	160

Every care has been taken to ensure the accuracy of the information in this document, but we take no liability for any errors or omissions. We reserve the right to make changes without prior notice.