BKN

Support unit for end of ball screw.

All dimensions in mm.

Using standard shaft nut type RN.

* The Maximal tightening torque of the nut should not be exceeded. It is not required, neither recommended to tighten the nut to its limits. What is mandatory is to always tighten the set screws to prescribed values, after the nut have been tighten to a distinct stop.



Every care has been taken to ensure the accuracy of the information in this document, but we take no liability for any errors or omissions. We reserve the right to make changes without prior notice.

General Data

* Dynamic limits are the loads where a reliable life time calculation isn't possible to do. Noise level and heat generation will also increase rapidly above this limit. Static limit is calculated with a static saftey factor s0 = 2,5 to C0a. See more in section "Life Calculation" or contact Rollco for advise.

*Axial dynamic rating Ca is used to calculate the nominal life of the bearings. Axial static rating C0a is a theoretical value where the bearings get permanent damaged. See more in section "Life Calculation" or contact Rollco for advise.

Designation	Compatible with	Bearing	Dynamic Permissible Axial Load (N)	Static Permissible Axial Load (N)	Max. Tightening Torque Nut (Nm)*
BKN08	Screw dim. 1202 / 1204	708 A	1020	1760	3
BKN10	Screw dim. 1402	7000 A	2000	3150	3
BKN12	Screw dim. 1605 / 1610 / 1616 / 1632	7001 A	2400	3600	7
BKN15	Screw dim. 2005 / 2020 / 2040	7002 A	2900	4200	8
BKN17	Screw dim. 2510	7203 A	4100	7300	10
BKN20	Screw dim. 2505 / 2525 / 2550	7004 A	5800	8000	17
BKN25	Screw dim. 3205 / 3210 / 3220 / 3232	7205 B	9700	14500	21
BKN30	Screw dim. 4005 / 4010 / 4020 / 4040	7206 B	14200	20800	32
BKN40	Screw dim. 5010 / 5050	7208 B	18000	35400	72

Designation	Tightening Torque Set Screws (Nm)	Axial Dynamic Load Capacity Ca (N)	Axial Static Load Capacity C0a (N)
BKN08	0.6	4410	4390
BKN10	0.6	7040	7880
BKN12	1.5	7600	9000
BKN15	1.5	8000	10500
BKN17	1.5	14200	18200
BKN20	1.5	14200	20000
BKN25	5.0	26000	36200
BKN30	5.0	36000	51900
BKN40	5.0	56100	88500

Every care has been taken to ensure the accuracy of the information in this document, but we take no liability for any errors or omissions. We reserve the right to make changes without prior notice.

Dimensions

BKN 08 only

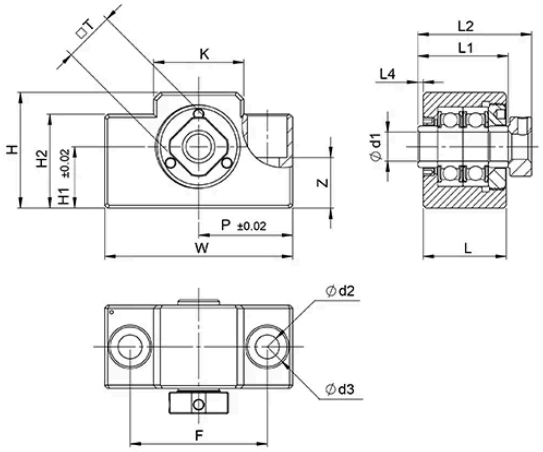

BKN 10 - 40

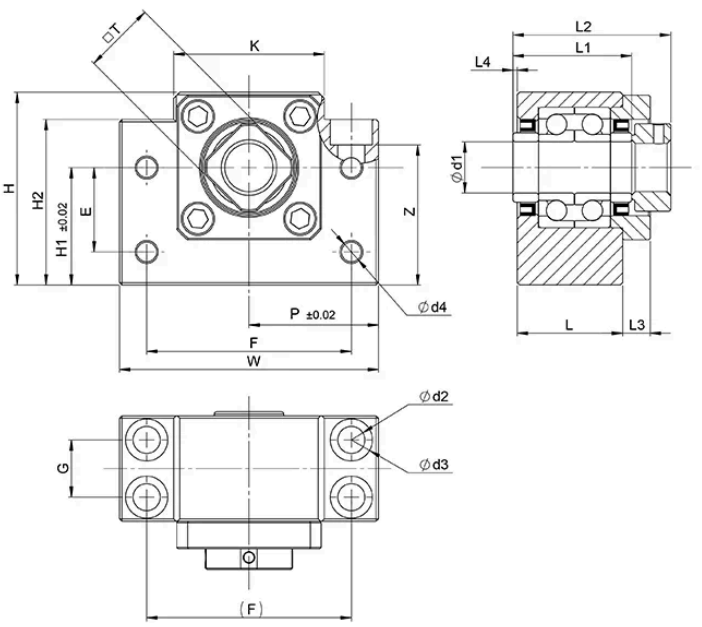

Designation	E	F	G	H	K	L	P	T	Z
BKN08	-	38	-	32	25	23	26	14	14
BKN10	15	46	13	39	34	25	30	16	27.5
BKN12	18	46	13	43	34	25	30	19	31
BKN15	18	54	15	48	40	27	35	22	31.5
BKN17	28	68	19	64	50	35	43	24	46.5
BKN20	22	70	19	60	52	35	44	30	41.5
BKN25	33	85	22	80	64	42	53	35	59
BKN30	33	102	23	89	76	45	64	40	65
BKN40	37	130	33	110	100	61	80	50	72.5

Designation	d1	d2	D3	D4	H1	H2	L1	L2	L3	L4
BKN08	8	6.6	11	-	17	26	25	31.5	-	1.5
BKN10	10	6.6	10.8	5.5	22	32.5	27	35	5	0.5
BKN12	12	6.6	10.8	5.5	25	32.5	27	35	5	0.5
BKN15	15	6.6	11	5.5	28	38	30	38	6	0
BKN17	17	9	14	6.6	39	55	38	51	9	0
BKN20	20	9	14	6.6	34	50	40	51	8	0
BKN25	25	11	17	9	48	70	48	63	12	0
BKN30	30	14	20	11	51	78	50	70	14	0
BKN40	40	18	26	14	60	90	66	91	18	0

Designation	W
BKN08	52
BKN10	60
BKN12	60
BKN15	70
BKN17	86

Every care has been taken to ensure the accuracy of the information in this document, but we take no liability for any errors or omissions. We reserve the right to make changes without prior notice.

Designation	W
BKN20	88
BKN25	106
BKN30	128
BKN40	160

Every care has been taken to ensure the accuracy of the information in this document, but we take no liability for any errors or omissions. We reserve the right to make changes without prior notice.