RNB

Housing for ball nut FSCR/FSCL.

Other types on request. Please contact Rollco for more information.

All dimensions in mm.

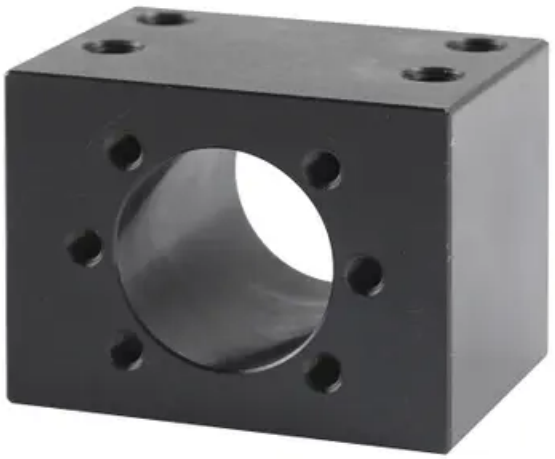

Every care has been taken to ensure the accuracy of the information in this document, but we take no liability for any errors or omissions. We reserve the right to make changes without prior notice.

Dimensions

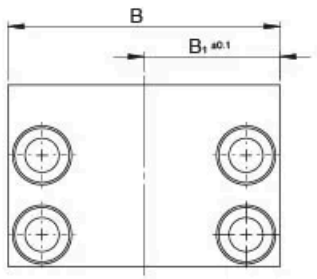

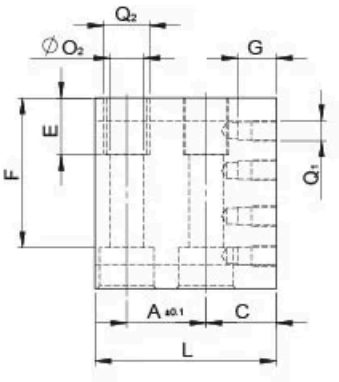

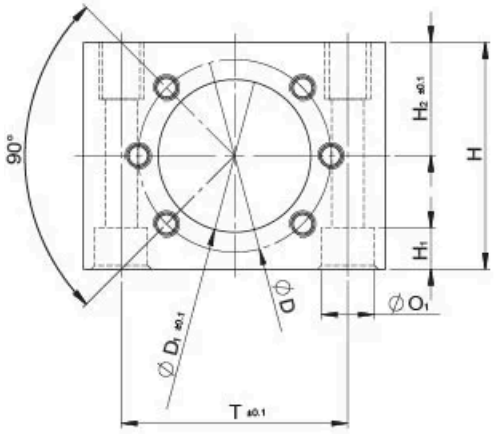

Fig. 1

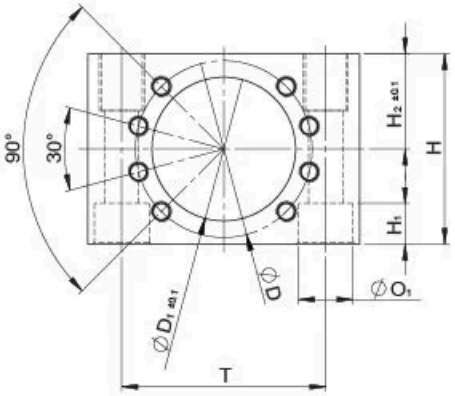

Fig. 2

Designation	Fig.	H1	G	A	B	H	D	F	L
RNB16	1	11	10	20	70	48	38	37	50
RNB20	1	9	11	23	75	54	47	45	55
RNB25	1	9	11	23	80	58	51	49	55
RNB32	1	16	14	30	100	68	65	52	70
RNB40	2	18	17	35	120	84	78	66	80

Designation	C	T	E	d1	H2	B1	O1	O2	Q1	Q2
RNB16	20	50	15	28.4	24	35	14	8.4	M5	M10
RNB20	22	55	15	36.4	28	37.5	14	8.4	M6	M10
RNB25	22	60	15	40.4	30	40	14	8.4	M6	M10
RNB32	27	75	20	50.4	35	50	18	13	M8	M16
RNB40	31	90	25	63.4	42	60	24	15	M8	M18

Every care has been taken to ensure the accuracy of the information in this document, but we take no liability for any errors or omissions. We reserve the right to make changes without prior notice.