# RN/RN..W

Lock nut for ball screw.

Spanner tools for radial holes "R" available from Rollco.

All dimensions in mm.

* The Maximal tightening torque of the nut should not be exceeded. It is not required, neither recommended to tighten the nut to its limits. What is mandatory is to always tighten the set screws to prescribed values, after the nut have been tighten to a distinct stop.




Every care has been taken to ensure the accuracy of the information in this document, but we take no liability for any errors or omissions. We reserve the right to make changes without prior notice.



## General Data

| Designation | Max. Tightening Torque Nut (Nm)* | Tightening Torque Set Screws (Nm) |
|---|---|---|
| **RN06** | 2 | 0.6 |
| **RN08** | 3 | 0.6 |
| **RN10** | 3 | 0.6 |
| **RN12** | 7 | 1.5 |
| **RN15** | 8 | 1.5 |
| **RN17** | 10 | 1.5 |
| **RN20** | 17 | 1.5 |
| **RN25** | 21 | 5.0 |
| **RN30** | 32 | 5.0 |
| **RN40** | 72 | 5.0 |
| **RN25W** | 87 | 5.0 |
| **RN30W** | 105 | 5.0 |
| **RN40W** | 160 | 5.0 |

## Dimensions

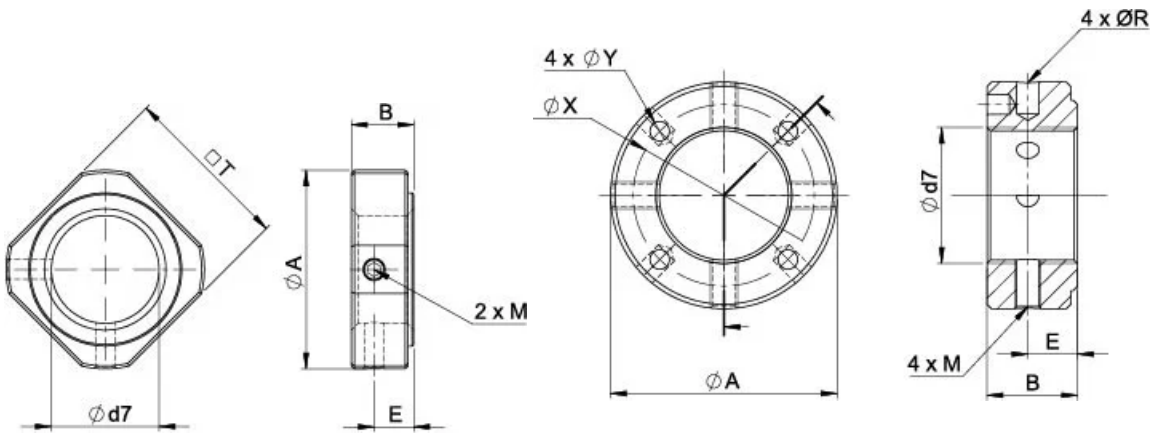


| Designation | A | B | E | M | R | T | Y | d7 | X |
|---|---|---|---|---|---|---|---|---|---|
| **RN06** | 13.5 | 5 | 2.7 | M3 | - | 12 | - | M6x0.75 | - |
| **RN08** | 16.4 | 6.5 | 4 | M3 | - | 14 | - | M8x1 | - |


Every care has been taken to ensure the accuracy of the information in this document, but we take no liability for any errors or omissions. We reserve the right to make changes without prior notice.

| Designation | A | B | E | M | R | T | Y | d7 | X |
|---|---|---|---|---|---|---|---|---|---|
| **RN10** | 19 | 8 | 5.5 | M3 | - | 16 | - | M10x1 | - |
| **RN12** | 22.8 | 8 | 5.5 | M4 | - | 19 | - | M12x1 | - |
| **RN15** | 25.8 | 8 | 4.75 | M4 | - | 22 | - | M15x1 | - |
| **RN17** | 29 | 13 | 9 | M4 | - | 24 | - | M17x1 | - |
| **RN20** | 35 | 11 | 7 | M4 | - | 30 | - | M20x1 | - |
| **RN25** | 43 | 15 | 10 | M6 | - | 35 | - | M25x1.5 | - |
| **RN30** | 48 | 20 | 14 | M6 | - | 40 | - | M30x1.5 | - |
| **RN40** | 62 | 25 | 18 | M6 | - | 50 | - | M40x1.5 | - |
| **RN25W** | 45 | 20 | 11 | M6 | 5 | - | 4.3 | M25x1.5 | 35 |
| **RN30W** | 50 | 20 | 11 | M6 | 5 | - | 4.3 | M30x1.5 | 40 |
| **RN40W** | 60 | 22 | 12 | M6 | 5 | - | 4.3 | M40x1.5 | 50 |


Every care has been taken to ensure the accuracy of the information in this document, but we take no liability for any errors or omissions. We reserve the right to make changes without prior notice.