FDCR

Double Nut with Flange (DIN 69051).

Standard nuts are with oil-seals.

Best combination for smooth and backlash-free operation with high rigidity.

A double nut must always be used pre-loaded and have to be assembled on the ball screw spindle by Rollco. Standard preload is P2, see “Preload and clearance” in Technical information.

Lead accuracy G5 or better is required for proper function. For best performance, a ground spindle is recommended.

All dimensions in mm.

Material: Ball screw: S55C (according to standard JIS G4051) / Ball nut: SCM415H (according to standard JIS G4053)



Every care has been taken to ensure the accuracy of the information in this document, but we take no liability for any errors or omissions. We reserve the right to make changes without prior notice.

General Data

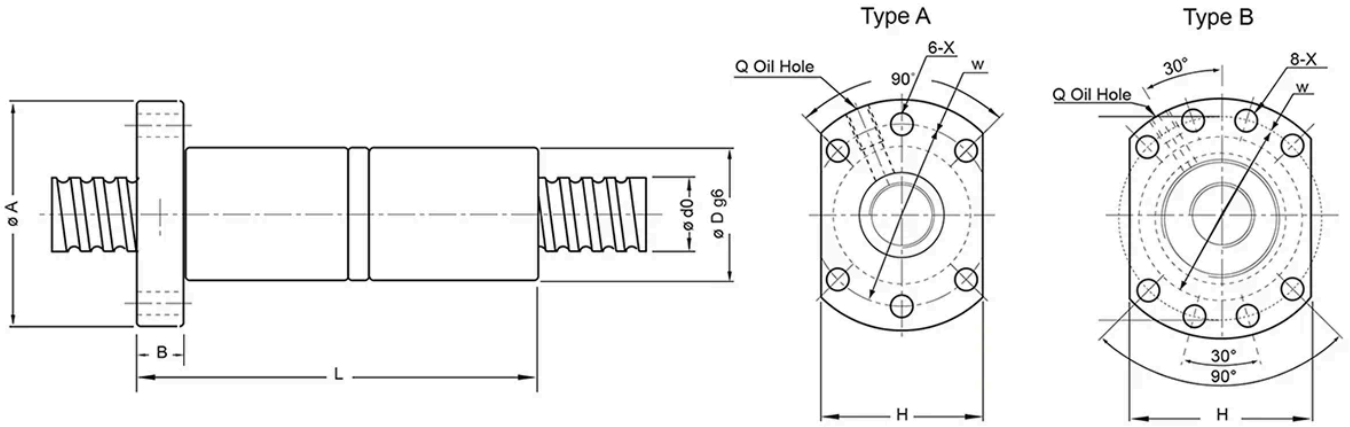

Designation	Compatible with	Type	Dynamic Load Ratings Ca (N)	Static Load Ratings C0a (N)	Ball diameter
FDCR1605	BKN12 / FKN12 / BFN12 / FFN12	A	10291	11223	3.175
FDCR2005	BKN15 / FKN15 / BFN15 / FFN15	A	14833	19571	3.175
FDCR2505	BKN20 / FKN20 / BFN20 / FFN20	A	16716	25320	3.175
FDCR2510	BKN17 / FKN17 / BFN17 / FFN17	A	28263	36248	4.762
FDCR3205	BKN25 / FKN25 / WBK25DF / BFN25 / FFN25	A	18874	33383	3.175
FDCR3210	BKN25 / FKN25 / WBK25DF / BFN25 / FFN25	A	47422	76861	6.35
FDCR4005	BKN30 / FKN30 / WBK30DF / WBK30DFF / BFN30 / FFN30	B	21013	42595	3.175
FDCR4010	BKN30 / FKN30 / WBK30DF / WBK30DFF / BFN30 / FFN30	B	52964	98826	6.35
FDCR5010	BKN40 / WBK40DF / WBK40DFF / BFN40	B	58203	120791	6.35

Designation	Turns x circuits
FDCR1605	1 x 3
FDCR2005	1 x 4
FDCR2505	1 x 4
FDCR2510	1 x 4
FDCR3205	1 x 4
FDCR3210	1 x 4
FDCR4005	1 x 4
FDCR4010	1 x 4
FDCR5010	1 x 4

Every care has been taken to ensure the accuracy of the information in this document, but we take no liability for any errors or omissions. We reserve the right to make changes without prior notice.

Dimensions

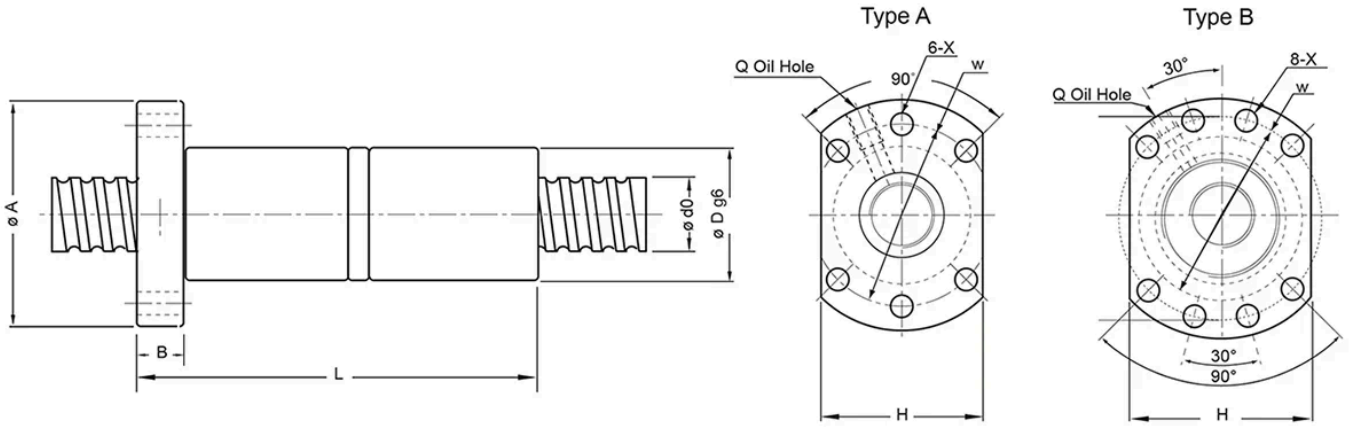

Designation	A	B	D	H	L	Q	W	X	d0 x Lead
FDCR1605	48	10	28	40	80	M6	38	5.5	16 x 5
FDCR2005	58	12	36	44	92	M6	47	6.6	20 x 5
FDCR2505	62	12	40	48	92	M6	51	6.6	25 x 5
FDCR2510	62	12	40	48	153	M6	51	6.6	25 x 10
FDCR3205	80	12	50	62	92	M6	65	9	32 x 5
FDCR3210	80	16	50	62	160	M6	65	9	32 x 10
FDCR4005	93	15	63	70	96	M8	78	9	40 x 5
FDCR4010	93	18	63	70	162	M8	78	9	40 x 10
FDCR5010	110	16	75	85	162	M8	93	11	50 x 10

Every care has been taken to ensure the accuracy of the information in this document, but we take no liability for any errors or omissions. We reserve the right to make changes without prior notice.