SFYAR

Single Nut with Flange, Over Lead.

All dimensions in mm.

Material: Ball screw: S55C (according to standard JIS G4051) / Ball nut: SCM415H (according to standard JIS G4053)



Every care has been taken to ensure the accuracy of the information in this document, but we take no liability for any errors or omissions. We reserve the right to make changes without prior notice.

General Data

Designation	Compatible with	Dynamic Load Ratings Ca (N)	Static Load Ratings C0a (N)	Ball diameter	Turns x circuits
SFYAR1632	BKN12 / FKN12 / BFN12 / FFN12	4930	11160	2.778	0.8 x 2
SFYAR2040	BKN15 / FKN15 / BFN15 / FFN15	6530	15970	3.175	0.8 x 2
SFYAR2550	BKN20 / FKN20 / BFN20 / FFN20	9760	24950	3.969	0.8 x 2

Dimensions

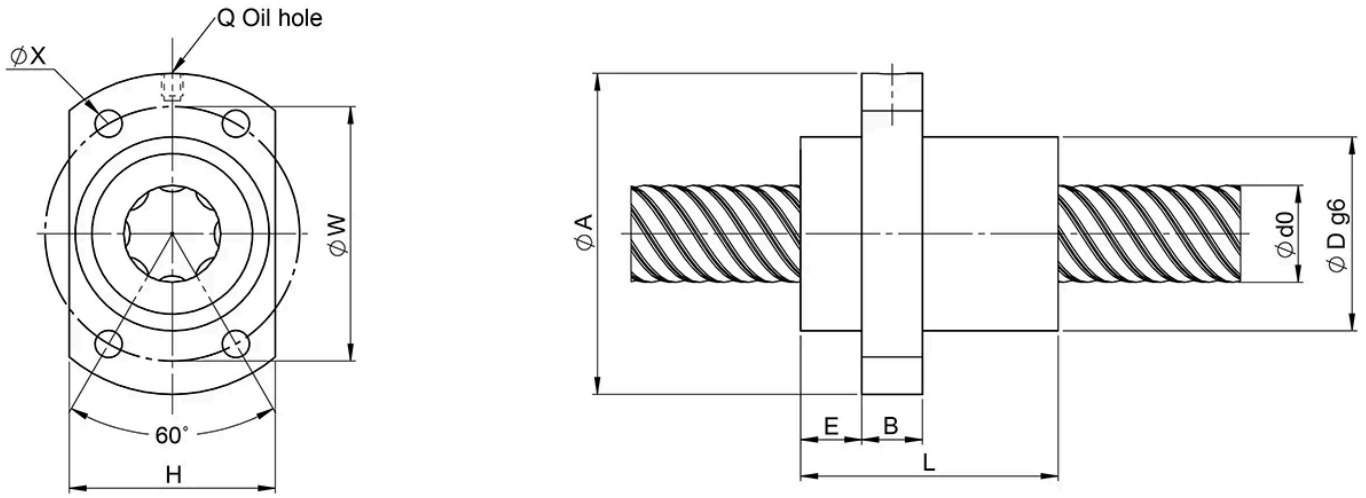

Designation	A	B	D	E	H	L	Q	W	X
SFYAR1632	53	10	32	10.1	34	42.5	M6	42	4.5
SFYAR2040	62	10	39	13	41	48	M6	50	5.5
SFYAR2550	74	12	47	15	49	58	M6	60	6.6

Designation	d0 x Lead
SFYAR1632	16 x 32
SFYAR2040	20 x 40
SFYAR2550	25 x 50

Every care has been taken to ensure the accuracy of the information in this document, but we take no liability for any errors or omissions. We reserve the right to make changes without prior notice.